EmGRAND 390M-ET / EmGRAND 390M-DET

DOUBLE ARROW SLIM LED EMERGENCY EXIT SIGN

Features and Benefits

- New ultra slim and lightweight housing LED emergency exit signs with double arrow Exit signage.
- Designed for easy installation and maintenance.
- Samsung LED lamps provide high efficiency, durability and low energy consumption.





Recessed panel REC390 *

Technical Data

Mode of Operation	Maintained
Lamp	Samsung 2W High flux white LED
Operating Temperature	ta 0°C ~ 40°C
Mains Supply	230V AC 50Hz/60Hz
Power Consumption	< 3W
Battery	High temperature LiFePO4 battery
Charger	Fully automatic
Charging Monitor	Ø 5mm green LED
Recharge Period	24 hours
Testing Facility	Test-switch for independent testing
Emergency Duration	3 hours
Safety Feature	Low-voltage cut-off to prevent over-discharge of battery
Construction	Injection moulded fire retardant polycarbonate
Weight (Nett/Gross)	0.5 kg / 0.7 kg Recess plate: 0.1 kg
Compliance	SS 563-1:2010/A1:2017 SS 563-2:2010/A2:2017 IEC 60598-2-22:2021
Installation	Ceiling, wall, suspended or recessed mounting
Cable Entry	3 x 20mm Ø knockout hole
IP Rating	IP30
Legend	White text/graphical symbol over ISO green background
Viewing Distance	30 m
Warranty	1 year

Surface mount

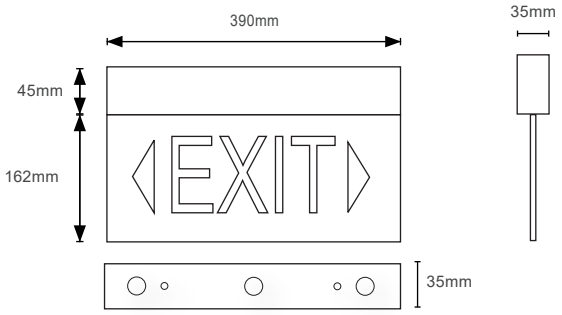

Recessed mount

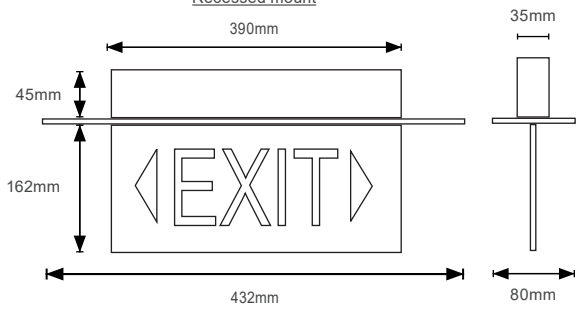

Opening size: 410 x 60mm

Ordering Information

MODEL	LEGEND	MODEL	LEGEND
EmGRAND 390M-ET	EXIT	EmGRAND 390M-DET	EXIT EXIT

* Remarks: Recessed panel REC390 for recessed mounting is sold as a separate accessory.

All information subject to change © Denko Lighting Pte Ltd 2026